REAL-TIME SIMULATION TECHNOLOGIES IN EDUCATION: A LINK TO MODERN ENGINEERING METHODS AND PRACTICES

Christian Dufour[1], Cacilda Andrade [2], Jean Bélanger[3]

Abstract *— This paper discusses industrial applications of real time simulation technologies and opportunities that exist to include them in modern engineering education curricula. Real-time simulators are used extensively in many engineering fields. As a consequence, the inclusion of simulation applications in academic curricula can provide great value to the student. Statistical power grid protection tests, aircraft design and simulation, motor drive controller design methods and space robot integration are a few examples of real-time simulator technology applications to be discussed in this paper.*

Index Terms — Real-Time Simulation, Hardware-In-the-Loop, Power Grid Simulation, Motor Drive Control, Robotic control.

INTRODUCTION

Over the last two decades, commercially available computer has become both increasingly powerful and increasingly affordable. This, in turn, has led to the emergence of highly sophisticated simulation software applications that not only enable high-fidelity simulation of dynamic systems and related controls, but also automatic code generation for implementation in industrial controllers.

Used in conjunction with the current generation of real-time simulators, these simulation software applications form the basis of the 'Model-Based Design' paradigm; a control design methodology that is centered on the use of reference system models. In the Model-Based Design (MBD) approach, initial modeling and requirements, early controller prototypes, production code generation, production controller testing and integration are all derived from reference models. The approach has the objective of accelerating the design cycle through the early detection of design flaws and other problems. In the automotive industry, in particular, the MBD method is a de-facto standard. MBD is also quickly gaining acceptance and being adopted by design engineers in a large number of industries.

Real-time simulation, based on automatic code generation, is used in many engineering field and applications such as: aircraft flight control design & validation, industrial motor drive design, complex robotic controller design and power grid statistical protection tests.

These applications benefit from the use of real-time simulators in a number of ways. First, real-time simulation produces a set of requirements and specifications that can be used by all disparate teams/subcontractors involved in a project. Secondly, it enables testing of simulated devices at or beyond their normal operating limits without the risks involved with testing of real devices, especially when high power levels are present. Third, it is easier and less risky to test fault responses on a simulated model. Finally, the simulation acceleration factor obtained by the use of compiled code (instead of the interpreted code used by most simulation tools) enables the realization of rapid batch simulations. These can be used for statistical studies using the Monte-Carlo simulation method for power grid applications, or data fitting/curve matching in the case of aircraft parameter identification applications [1].

This paper will detail these industrial applications and discuss the possibility of including these applications in a modern engineering educational curriculum.

APPLICATIONS OF REAL-TIME SIMULATION TECHNOLOGIES

Various applications of real-time simulation are detailed in this section. These applications can be broken into three important categories:

- Rapid Control Prototyping (RCP)
- Hardware-in-the-Loop testing (HIL)
- Rapid Batch Simulation (RBS)

Consider a controlled process which is composed of a plant with a controller acting upon it. In RCP applications, an engineer will use a real-time simulator to quickly implement a controller and connect it to the real plant. HIL acts in an opposite manner. Its main purpose is to test actual controllers connected to a simulated plant. Of course, it is very important not forget that human beings are included in the category of controllers. Hence, aircraft flight simulators can be considered as a form of HIL simulation. RBS is typically used to accelerate simulation in massive batch run tests, such as aircraft parameter identification using aircraft flight data.

Aircraft flight training simulator

Aircraft manufacturer Empresa Brasileira de Aeronáutica (Embraer) is using the RT-LAB real-time simulation software platform as the core component of a real-time simulator executing a high fidelity aircraft model

1 Christian Dufour, Opal-RT Technologies Inc.1751 Richardson,, Montreal, QC, H3K 1G6, www.opal-rt.com, Canada, christian.dufour@opal-rt.com
2 Cacilda Andrade, Centro Universitário São Camilo, Rua Raul Pompéia, 144 - São Paulo - SP Brazil, www.scamilo.edu.br, candrade@scamilo.br
3 Jean Bélanger, Opal-RT Technologies Inc.1751 Richardson,, Montreal, QC, H3K 1G6, Canada, www.opal-rt.com, jean.belanger @opal-rt.com

of a fighter plane[2]. In this application, the RT-LAB system runs in closed loop with the real onboard aircraft computer and the real aircraft cockpit. RT-LAB also provides control of force feedback (ex: flight control joystick), visual display and sound generator.

The RT-LAB simulator is composed of more than 200 Digital I/O points, more than 64 analog I/O (force feedback and pot reading), two MIL1553 cards (for communication with onboard computer and aircraft components) and two Arinc 429 cards (for communication with onboard computer and aircraft components). TCP/IP communication handles sending data to the visual display and sound generator. Custom-made I/O developed by Opal-RT reads the aircraft rotary variable differential transformer (RVDT) throttle position sensor (high speed analog I/O). This type of I/O was design using the Xilinx System Generator blockset, supported by the RT-LAB system. The whole simulation is controlled by training software designed by Embraer. This software uses the RT-LAB API to control the entire simulation.

Aircraft flight parameter identification

The development of the EMBRAER 170 Jet has benefited from an expanded modeling and simulation capability at Embraer. Development of a highly accurate aerodynamic model became an important part of the design development phase. This modeling was primarily conducted using Simulink. To obtain an accurate model, parameter identification needed to be done using actual flight data. This was performed using a software suite called RT-LAB/DINAMO [1]. A real-time simulator is necessary for handling this task since multiple batch runs are required to fit the model parameters to actual flight data using the Nelder-Mead Simplex and Levenberg-Marquardt optimization algorithms. The latter algorithm is used to fit model coefficients using maneuver time history - a particularly computation-intensive task. These fittings are made using captured flight data of actual aircraft maneuvers such as Takeoff, Jet Dutch Roll and Jet Stall.

The final aircraft model includes all aspects of the plane including motion and aerodynamic equations, engine, hydraulic systems, and sensors. The different teams involved in the development of the jet use the resulting model. Control engineers use it to develop the control laws, the autopilot team uses it to make sure their design meets specifications, and the systems team uses it to verify all possible contingencies and faults.

Industrial motor drive design

Mitsubishi Electric Co. has used real-time simulation technologies to design motor drives for machine tool applications. The challenge faced on this project was that the motor itself, a permanent magnet synchronous motor, and its related controllers were being designed simultaneously. Therefore, a physical motor was not available for controller tests. The solution was to use a virtual motor simulated in real-time during the controller testing phase [3].

The setup consisted of two main parts: the controller and the motor drive circuit. The controller includes a control module and PWM generator board. The vector control runs at 55 µs and the PWM carrier frequency can be varied up to 9 kHz. The motor drive circuit was implemented in Simulink and simulated in real-time on an RT-LAB electrical simulator. The motor drive was simulated by two Pentium 4 target processors, each operating at 2.8 GHz: one for the AC-DC part, and one for the DC-AC part, including the motor. A third Pentium processor was used for master control of the simulator, and for data acquisition sent to a remote host by a 100 Mb Ethernet link.

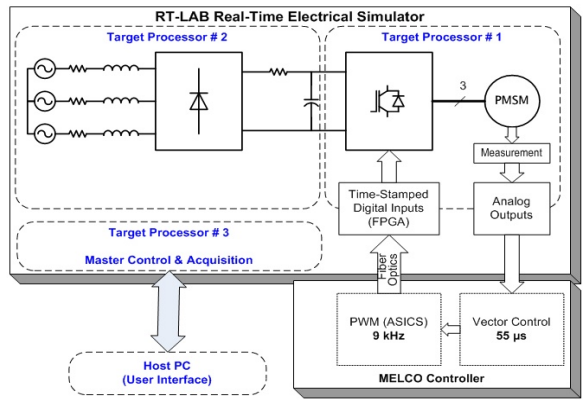

Fig. 1. Real-Time Simulation of a PMSM drive

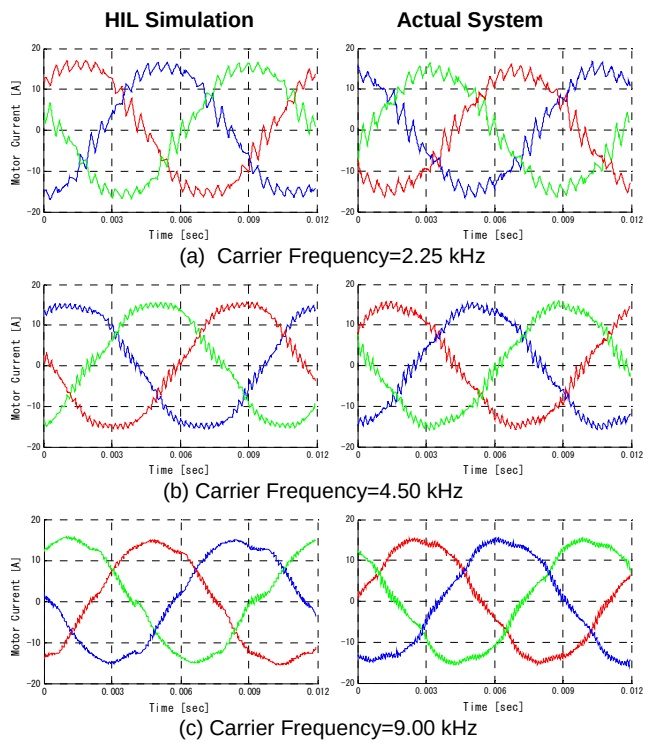

Fig. 2. Effect of PWM carrier frequency

The simulator used a blockset called RTeDRIVE, designed by Opal-RT, which uses interpolation techniques to solve undersampling problems of the PWM waveform by the real-time simulator. As can be seen in Fig. 2, HIL simulations closely match actual system results despite a 10µs sample time and a nominal 9 kHz PWM frequency. Furthermore, one can observe that the current ripple amplitude decreases when PWM frequency is increased, just like in a real drive system.

If this kind of virtual motor drive is not sufficient, it can be complemented with a real motor drive kit design especially for educational purposes, such as DriveLab. RT-LAB DriveLab is a fully integrated electric drive system ideal for teaching, lab experiments and research in the field of electric machine drive using a Rapid Control Prototyping approach. Four types of motors are available at power levels of approximately 300W: A permanent magnet DC generator, permanent magnet DC motor, 3-phase permanent magnet motor, and 3-phase induction motor. These motors also come with a dual 6-pulse inverter drive board.

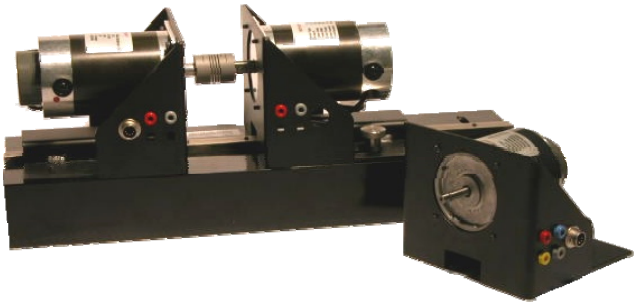

Fig. 3. Motor set of RT-LAB DriveLab

In addition to 4 types of motors and related power electronics drives, DriveLab also includes Simulink-based control models and I/Os; these models are therefore compatible with and are easily implemented on RT-LAB-based simulators, for rapidly controlling the motors.

The system has been specially designed to be simple and robust for use in educational laboratories, but is sufficiently open to allow professors or students to expand the system to meet their unique requirements, and to develop new control strategies and test them on the DriveLab platform.

Power Grid Statistical Test

Protection and insulation coordination techniques make use of statistical (Monte-Carlo) studies, in order to deal with inherent random events, such as the electrical angle at which a breaker closes, or the point-on-wave at which a fault is applied. For protection coordination studies, multiple fault scenarios are required to determine appropriate protective relay settings and correct equipment sizing. By testing multiple fault occurrences, the measured quantities are identified, recorded and stored in a database for later retrieval, analysis and study. The Monte-Carlo technique has been used in the past for practical studies, such as the evaluation of the probable overvoltage at a substation [5], using traditional offline simulation software such as ATP or EMTP-RV.

The large power system model depicted in Fig. 4 illustrates a network with a very large number of busses and sort lines. It was first built and tested in the EMTP-RV environment and then converted to the SimPowerSystems/Simulink environment as a distributed model, ready to use with the RT-LAB real-time simulator.

The 60 Hz, 138/230kV HVAC power system model is an 86-bus electrical network. Its 86 transmission lines supply power to a total of 23 loads, rated at 413 MVA (403 MW, 91MVAR) each. Nine ideal voltage sources with lumped equivalent impedance represent the generators. Full machine dynamics can easily be added, as these models are available in SimPowerSystems. Fig. 4 describes the simulated power system along with CPU task separation for the 8-core target used in this test.

Just a decade ago, simulation of such a model would not have been possible. A model of such complexity would have required a supercomputer composed of proprietary hardware, such as HYPERSIM from Hydro-Quebec. Today, this model can be simulated in real-time at a time step of 50 µs on Commercial-off-the-Shelf (COTS) based PC computer hardware equipped with the RT-LAB real-time simulation platform. This particular 86-bus model can be run on a standard dual-Quad-core PC running the QNX real-time operating system [4].

The Monte Carlo test is designed using the Python script language, and using the RT-LAB API to control simulation runs, data acquisition and post-treatment. As can be observed in Fig. 5-A, at the point where two different fault durations are applied (1 cycle versus 3 cycles), the overvoltage measured during certain contingencies is dependent on fault timing. This comparison shows the necessity of using statistical methods to calculate the maximum overvoltage to achieve an efficient design of the power system under study. It is also important to understand that a significant number of tests may be needed, depending on the study. The total number of tests needs to be large enough to obtain acceptable precision on the statistic distribution. The criteria used to determine the number of tests can be decided upon by calculating the evolution of the average value (V50%) and/or, for instance, the evolution of the maximum overvoltage having a 2% probability of occurring (V2%). The evolution of these two quantities, according to the number of tests performed, is illustrated in Fig. 5-D.

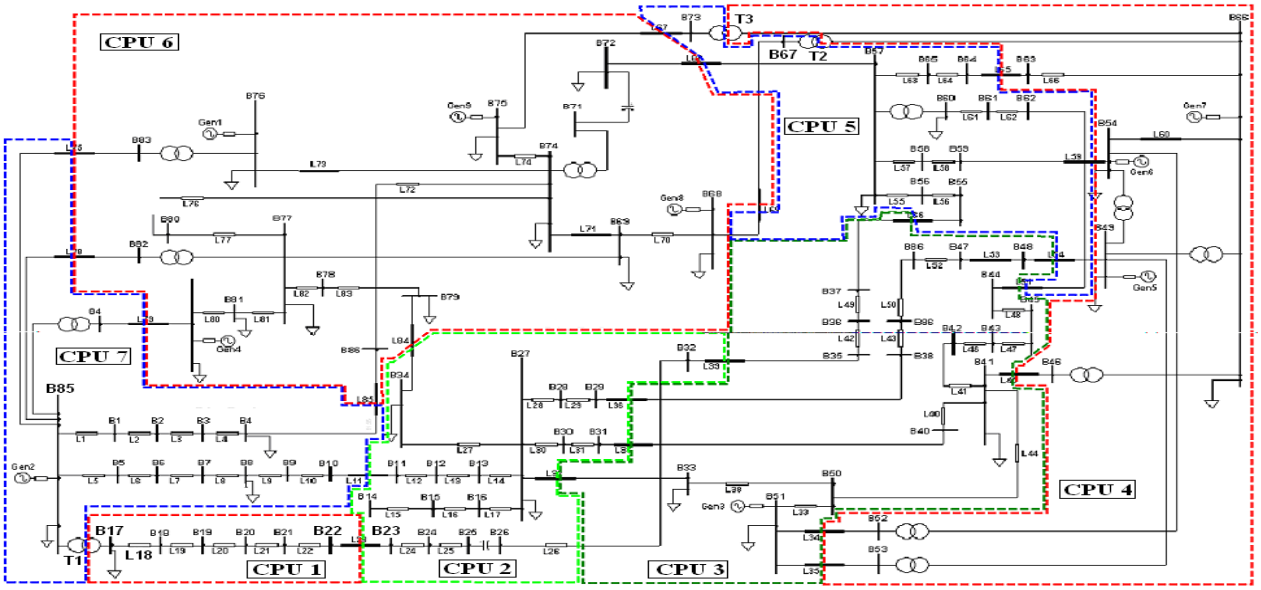

Fig. 4. Schematic diagram of the network model

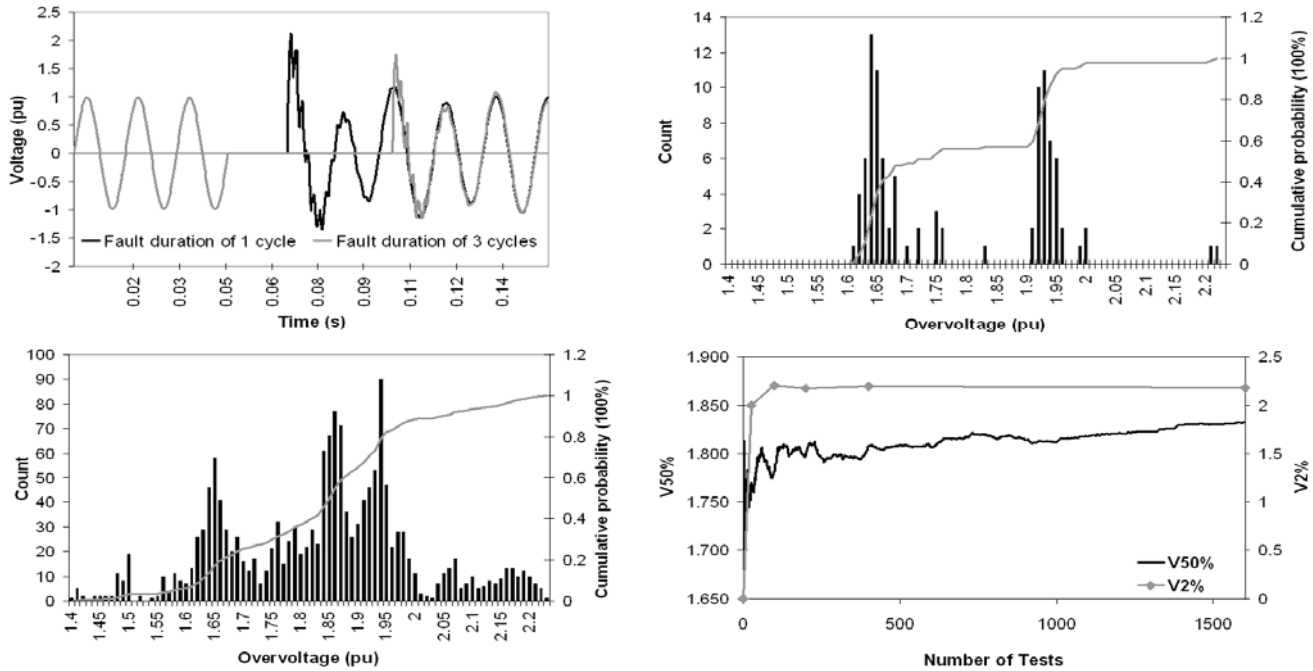

Fig. 5. Monte-Carlo Study results. **A)** Phase-a voltage for 1-cycle and a 3-cycles fault duration (Tstart = 50 ms). **B) and C)** Overvoltage statistic distribution for 100 and 1600 tests. **D)** Mean value and standard deviation evolution with respect to number of samples.

International Space Station Robotic Arm Testing

As a partner in the International Space Station (ISS), Canada is responsible for the verification of all tasks involving the Special Purpose Dextrous Manipulator (SPDM), depicted in Fig. 6.

Testing the SPDM before deployment on the ISS represented a unique challenge since it could not support their own weight when subject to the Earth's gravity! Therefore, the best way to test the robot controls was through Hardware-in-the-Loop simulation [6].

One of the main technical challenges is verifying the feasibility of the insertion/extraction tasks by the robot hand SARAH (Self Adaptive Robotic Auxiliary Hand)[7]. The forces involved are the result of complex frictional contact between the payload and the work site. Good contact models are being developed for non-real-time simulation but their real-time equivalents are still lacking precision. Moreover, the evaluation of different parameters is still mostly a trial and error process. Therefore, while most of the verification can rely on pure simulation, the contact part needs to be verified using a real robotic hand.

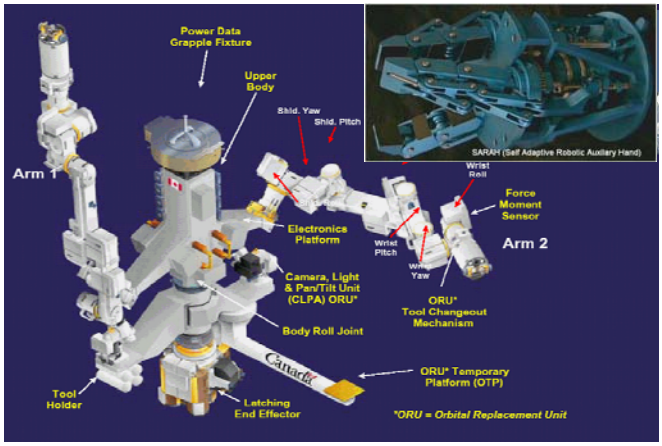

Fig. 6. The Special Purpose Dextrous Manipulator of ISS.

Fig. 7. SPDM Hardware-In-the-Loop testing system.

In the HIL test system, based on RT-LAB, a ground robot is driven by the output of the teleoperated space robot simulation. The system is shown in Fig. 7. It is a Hardware-in-the-Loop simulator consisting of a rigid robot with its control, a simulation of SPDM dynamics and a visualization engine. An operator controls the motion of SPDM through the simulation engine that generates the endpoint motion of the SPDM. It is then used as a setpoint for the robot controller that ensures that the robot endpoint follows the same trajectory as the SPDM model running in real-time. The contact forces are measured using force/moment sensors and fed back into the simulator to allow the dynamic simulation engine to react to external contact forces. This concept is very flexible since it can accommodate vibration of the space robot base or other phenomena. It can also be used to represent different space robots.

The control laws of the SARAH hand were also developed and tested using RT-LAB prior to integration on the SPDM.

CONCLUSION

This paper has presented various industrial applications of real-time simulation in the fields of avionics, motor drives, power systems and robotics.

As modern engineering projects become more complex, often with tight budgets and shortened development times, simulation technologies are becoming increasingly crucial to their success. It is believed that modern engineering curricula would benefit from the inclusion of real-time simulation technology courses because of widespread usage of simulation technology, both by industry and by researchers.

REFERENCES

[1] Cavalcanti, S., Papini, M., "Preliminary model matching of the Embraer 170 Jet: Flight vehicle system ID-Part 1", Atmospheric Flight Mechanics Conference, Austin, Tx , USA (11/08/2003), Journal of aircraft, ISSN 0021-8669.

[2] Embraer journal "BANDEIRANTE: Information from Embraer to Brazil and abroad", Ano 38, Nº 730, Feb. 2008, pp.13-15

[3] Harakawa, M., Yamasaki, H., Nagano, T., Abourida, S., Dufour, C. *et al* "Real-Time Simulation of a Complete PMSM Drive at 10 us Time Step", Proc. of the 2005 International Power Electronics Conference (IPEC 2005) – April 4-8, 2005, Niigata, Japan.

[4] Paquin, J.N., Bélanger, J., Snider, L.A., Pirolli, C., Li, W. , " Monte-Carlo Study on a Large-Scale Power System Model in Real-Time using eMEGAsim", Proc. of ECCE 2009 - IEEEEnergy Conversion Con-gress and Exposition, San Jose, California, USA, Sept.20-24 , 2009.

[5] Vahidi, B., Ghorat, M., Goudarzi, E., "Overvoltage Calculation on Bam Substation by Monte Carlo Method with Accurate Substation Components Modeling", Proceedings of the 2007 IEEE PowerTech conference, Lausanne, Switzerland, July 1-5, 2007, pp. 1807-1811.

[6] Piedboeuf, J.C., Aghili, F., Doyon, M., Gonthier, Y., Martin, E., *et al*, "Emulation of Space Robot Through Hardware-in-the-Loop Simulation", Proc. of the 6th Int. Symposium on Artificial Intelligence and Robotics & Automation in Space: i-SAIRAS 2001, Canadian Space Agency, St-Hubert, Quebec, Canada, June 18-22, 2001.

[7] Martin É., Lussier-Desbiens A., Laliberté T. et Gosselin C. M., "SARAH Hand Used for Space Operations on STVF Robot", Proc. International Conference on Intelligent Manipulation and Grasping, Genoa, Italy, July 1-2, 2004