TECHNICAL SYSTEM DETERMINATION OF BACNET-LIGHTING CONTROL

EROMON, D.I., Ph.D, M.Engr., B.Engr. *(COREN) Erim Company and Associate, LLC, Greensboro, USA. Email: eromon9@aol.com, deromon@georgiasouthern.edu*

Abstract **-** The BACnet offers numerous benefits in building design and lighting control management. This is an effective and good international communication data control and protocol in building system management automation control based system. The BACnet-based lighting control system modeling and simulation are briefly introduced in this write up along with some experimental statistical analysis whose performance and result proves that energy consumption in BACnet environment can be drastically reduced to a much lesser percentage level by performing some experimental modeling and simulation techniques. Stability in terms of energy conservation and maximization can be greatly achieved. This demonstrated reduction in BACnet building control systems can prove stability and hence secure a stable operation in building control systems automation.

Introduction

In this modern age of technological development and innovations, commercial and industrial complexes provides conducive conditions using improved innovative automated technology in improving security systems, heating, ventilations etc in modern building technology. The importance of information technology in real time control of building automation interms of data storage has set a new platform in modern real time building networking automation technology. To achieve this, incorporating building transformation network and information technology in system automation become a critical focus point of discussion[9,10].

Due to the fact that in recent times, numerous technologies have been invented and adapted, but most of this technologies and innovations have been independently owned and operated, and could not necessarily be synchronized openly with others. This effect poses a major obstacle in synchronizing and integrating technologies of building automation systems, their by limiting the expandable flexibility that may be required or needed by building owners. In ameliorating this obstacle, the American Society of Heating, Refrigerating, and Air-Conditioning Engineers (ASHRAE) developed BACnet (Building Automation and Control Network), which is universally accepted international communication standard adopted in control systems and building automation[11–13] .

Illuminating controls yield many advantages in building automation design and operations. Some of this advantages are the reduction or minimization of energy utilization, effective organized control network, etc. Lighting control system provides many benefits in building management such as operational convenience, scheduled control, reducing energy consumption, moderating peak demand and so on. This is paramount in the realization of efficiency of Automated lighting control in building systems [3,4].

As a result of newer technological innovations into the digital lighting control systems, intelligent methods and approach are being introduced and incorporated to transform the modern lighting control systems in building to its closest highest optimal values.

System based distributed lighting control applying AC 230V was introduced by Alonso in powerline[13]. The KONNEXbased single chip lighting control system was introduced by Sanz [5]. While Hien, Rubinstein explained Digital Lighting Interface(DALI) protocol for lighting electronics and Integrated Building Environmental Communication System(IBECS) respectively [6-7]

As a result of the highly market competitiveness of most system communication protocol in networking system, their compactibility and interoperability in modern system lighting controls becomes serious focus that needed attention in building automation and control systems, stressing the fact that BACnet is a recognized and universally endorsed international standard in data communication and system protocol in building system automation[15]

Proposed in this write up is the introduction of BACnet-based lighting control system model with detailed study and evaluation of its performance in building automation system design, with consideration of modern integration of fluorescent light daylight dimming control techniques in lighting building automation. Equipments employing system BACnet protocol are interconnected. In this write up, part 2 explains the BACnet and Master–Slave/Token-Passing protocols(MS/TP), while a presentation of BACnet based lighting configuration control system study is discussed in part 3. The experimental model and integration of daylight fluorescent light dimming control system is addressed in part 4. While the evaluation, conclusions and future suggestions are addressed and present in conclusion.

1. **MS/TP and** Building automation control (**BACnet)**

Building automation control (BACnet) consists of an architecture and physical data link networks of four layers and application layers as depicted in fig.1.

Building automation control (BACnet) conveys information across a broad spectrum of both local to wide area system network that interface together to produce network system between lighting automation building networks, and a clear representation of remote object oriented monitoring of communication networks between building automation and equipment. This also produces several options for data protocol such as ARCNET, MS/TP, Ethernet, (Point-to-Point), and BACnet/IP. Of all these several options, MS/TP protocol is mostly applied because of it simplistic nature and cost effectiveness including simple implementation [14-17].

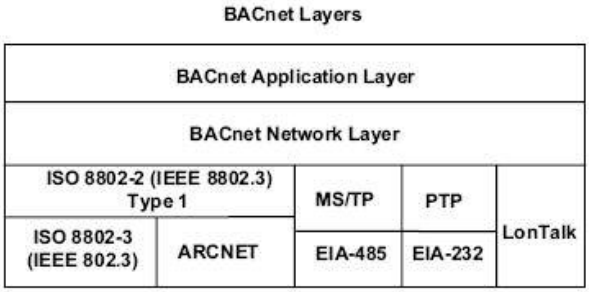

Fig. 1. Building automation control (**BACnet)** architecture.

Universal Synchronous and Asynchronous Receiver and Transmitter (USART) which is a complement design to produce BACnet MS/TP protocol applying a chip microprocessor and employ EIA-485 over range of cable pair. Thus the baud rates are of 38400, 19200, 9600 bits per second, indicating the configuration of MS/TP as master slave configuration system network.

The building automation system network (BACnet) broadly consisted of lighting, security facilities, safety etc, as depicted in figure 2, displays three hierachial, field and management system classifications of system automations interfaced with backbone Ethernet system building lighting automation devices. With system flexibility and adaptability[17,18].

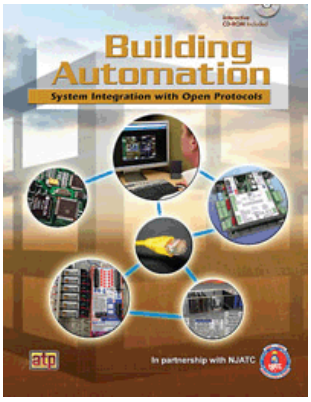

Fig. 2. BACnet-based building automation system architecture. ---courtesy of http://www.bacnet.org/

3. Building Automation Controller Network (BACnet) lighting system.

Lighting control systems can simply be broken into two parts which are digital communication and basic cable wiring, which expresses the similarity of luminaries and switches controlled by lighting controller software a great departure from the traditional electric wiring conventions, thus meaning the innovative application of modern Digital control communication means and operation of network information control devices are routed between lighting control devices through communication system, which is a also a departure from traditional hardware signal information. BACnet-based building automation system also enhances the execution of complex lighting control systems such as scheduled control, scene control, etc. Energy consumptions are enhanced or boosted by integrating building automation systems and lighting systems control.

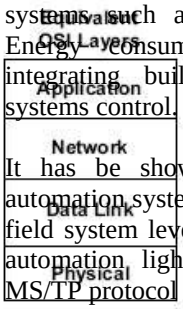

It has be shown from previous studies that building automation systems [7,8] is adaptable to MS/TP protocol in field system level information protocol networks. Building automation lighting control systems using BACnet and MS/TP protocol is proposed in this write up.

Lighting Control Panel (LCP) which usually housed the entire designed building lighting control system network, basically interface with distributed electricity network as it controls and monitor the system network for distributed lighting loads within the network, and this device is installed close to the system electric distribution panel for easy accessibility and routine maintenance.

Zone of protection and control is moderated by Lighting Control Panel (LCP), which provides various control and relaying mechanism such as lighting controller, relay controllers, incandescent lamp dimmers, and fluorescent lamp dimmers, usually installed in Lighting Control Panel network applying Building automation lighting control systems and MS/TP protocol.

The incandescent lamps which are normally controlled through a relay controller controls the on and off devices such as the single pole and single through control switches. The dimmer using its internal switching mechanism provide controls to incandescent lamps and other lighting devices through switching circuit, with dimming control provided, using ballast fluorescent with analog signal control level or approximately of 0-12V. Also because of the flickering nature of the fluorescent lamp a relay controlling device such as single pole, single through (SPST) switch relay is also needed to enhance the lighting quality, which has resulted to the application of modern technology sensors such as actuators and smart sensors, sensors and smart actuators such as outdoor photocells, illumination sensors, Passive Infrared (PIR) occupant detectors, IR (Infrared)

remote control receiver, (Passive Infrared) occupant detectors, IR (Infrared) remote control receiver etc.

Over all, lighting system controls operated and monitored on each zone of control and protection and its performance is a factor of the MS/TP system control network than higher Ethernet backbone system network.

4. Demonstrated Experimental model

This section explains the building automation systems lighting control (BACnet) system architecture, which provides lighting automated fluorescent light dimming control. Also explained here, is the building automation Lighting systems (BACnet) discussed in this write up.

*4.1. B*uilding automation systems lighting control *BACnet lighting controller*

The building automation systems lighting control (BACnet) shown in figure 3 demonstrated the developed controller hardware network in this write up, which is made up of hardware such as CPU, SRAM power supply, system inputs and outputs, etc. The input power produces direct current voltage of 8V and 18V from the system 30 volts AC to DC converter supply power source. The CPU of the building automation systems lighting control used the ATmega128, which has the network layer, building automation systems lighting controller (BACnet) and MS/TP data link layer, application system layer protocols and lighting control application programs executed in its 128 kilobits memory and 32 kilobits of SRAM. The lower 32 kilobits and upper 32 kilobits of the SRAM merge to the Real Time Clock (RTC) and address switch including reservation for possible future expansion purposes. The Real Time Clock which also has Non Volatile RAM embedded has data that can be routinely maintained during voltage fluctuations and break down. All network configurations in the Non Volatile RAM of Real Time Clock are saved accordingly, and Universal Synchronous and Asynchronous Receiver and Transmitter for serial communication ports are also provided by the ATmega128. MS/TP communication network employ an EIA-485 port with additional EIA-232 port used as data gathering and monitoring purposes.

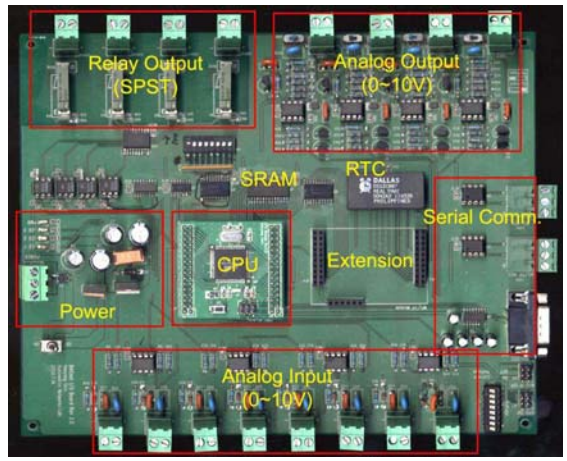

Fig. 3. Photograph of BACnet lighting controller.

4.3. Building Automation Control (BACnet)-based lighting control system.

The Building Automation Control (BACnet) model in this analysis consists of four Building Automation Control lighting systems interfaced on the MS/TP local end lighting base network, Separated into three categories which are; the inner area, window side, and middle respectively, such that each category is being controlled by Building Automation Control (BACnet) controller network. Here the Building Automation Controller control Analog output(AO) as depicted in figure 3, and also control the fluorescent lamp output over the range of almost zero to ninety percent. The Single Pole, Single Through (SPST) varies the dimming or flicking signals over a voltage range of zero to ten, which are further controlled by dimming ballast.

Building Automation Control (BACnet) network, uses the single-input and multi-outputs (SIMO) system feedback monitoring as depicted in figure 3. Similarly the Analog Input (AI) system moderate the sensor information. The *Confirmed ReadProperty* service is generated and controlled by the BACnet system controller 3 seconds interval to moderate the illumination of the indoor sensor of anolog input in the sensor input system.

4.4. System Lighting control

The lighting control system introduced by Rubinstein, Siminovitch, and Verderber [2], a *daylight, lumen maintenance, and scheduling* control scheme for building automated fluorescent light control system designed to moderate the illuminance desktop height of 600 lux or more from 06:00 to 18:00 taken into consideration the normal office hours in buildings is applied in this write up. A minimal of 600 lux desktop height of illumination of level [1]. And general office area category G, for daylight lumen maintenance is selected in this study. Several control outputs are varied in accordance to change of illumination value. When the indoor illuminance is varied by a factor in daylight, the illuminance becomes higher and consequently dimmed down when the illuminance is low.

5. Conclusions

Presented in this write up, applying experimental modeling, the energy conservation and system network improvement of fluorescent lighting control system was developed and demonstrated, with the BACnet-based lighting control system developed as a platform in integrated fluorescent lighting control. Demonstrated analysis proves that building automation systems lighting control (BACnet) has a capability of minimizing the total wasted energy consumption by fourty percent for lighting loads with a steady illuminance desktop height of 600 lux. In addition to this conserved energy saving of fourty percent, the tripping mechanism control account for nearly about thirty percent, while ten percent takes care of the florescent flickering or dimming control.

Also demonstrated in this analysis is the impact of the MS/TP control system network in the entire building system control. Thus in order to maintain a stable lighting control system, it is highly suggested to apply a minimal value of up to 0.8 of MS/TP to secure a reasonably stable building automated system lighting control.

Presently, newer technologies and innovations are still being explored and in this area in support of enhancing the energy efficiency by ASHRAE 135, Standing Standard Project Committee 135 (SSPC), which coordinates the level of improvement of the Building automation control (BACnet) protocol standardization and regulation, including the developed IEC 60929 and the Digital Addressable Lighting Interface protocol for illuminations controls. It is anticipated that in the nearest future newer innovations at enhancing the lighting controls efficiency in buildings energy conservation will be achieved. In addition, in an effort to update to BACnet's network security specifications, SSPC recommended Addendum-135-2008*g*. This addendum adds state-of-the-art digital signatures and encryption (SHA-256/HMAC and AES) to enable the creation of FIPS-compliant secure communications. This technology will be available on all BACnet media types and joins the capabilities of the certificate-based SSL/TLS that can be employed when using BACnet Web Services (BACnet/WS). Together, these technologies will serve the high security needs of the Smart Grid initiatives in the nearest future.

References

[1] KS A 3011. *Recommended levels of illumination*, Seoul, Korean Standard Association, 1998.

[2] F. Rubinstein, M. Siminovitch, R. Verderber, "Fifty percent energy savings with automatic lighting controls." *IEEE Transactions on Industry Application*, Vol. 29, No. 4, 1993, pp. 768–773.

[3] A. Choi, R.G. Mistrick, "On the prediction of energy savings for a daylight dimming system." *Journal of the IESNA* ,1997;26(2):77–90.

[4] J.M. Alonso, et al, "Development of a distributive control scheme for fluorescent lighting based on LonWorks technology." *IEEE Transactions on Industrial Electronics*, Dec. 2000, pp. 1253-1262.

[5] A. Sanz, J.I. Garcia-Nicolas, P. Estopinan. "A complete node for power line communication in a single chip." *IEEE-International Symposium on Power Line Communications and Its Applications*, Apr. 2005, pp. 285-289.

[6] P.F. Hein, "DALI-A digital addressable lighting interface for lighting electronics." *IEEE Industry Application Conference*, Sep. 2001, pp. 901-905.

[7] F. Rubinstein, S. Treado, P. Pettler, "Standardizing communication between lighting control devices." *IEEE-IAS Annual Conference*, 2003, pp. 805-811.

[8] W.S. Song, S.H. Hong, S.T. Bushby, *NISTIR 7038—a simulation analysis of the BACnet LANs*. National Institute of Standards and Technology, Oct. 2003.

[9] T.J. Park, Y.C. Kwon, S.H. Hong, "Performance evaluation of BACnet MS/TP protocol using experimental model." *Proceedings of ICIT'05*, Dec. 2005, pp. 577–582.

[10] H.M. Newman, *Direct digital control of building systems: theory and practice*. John Wiley & Sons, Inc. New York, 1994.

[11] V. Boed, *Networking and integration of facilities automation systems*, CRC Press, Boca Raton, 2000.

[12] S.T. Bushby, "BACnetTM: a standard communication infrastructure for intelligent buildings," *Automation in Construction*, 1999; pp. 529–540.

[13] S.T. Bushby, H.M. Newman, "BACnet today", *Supplement to ASHRAE Journal* , Oct, 2002, pp. 10–18.

[14] ANSI/ASHRAE Standard 135-2004, *BACnet: a data communication protocol forbuilding automation and control networks*. Atlanta, GA: American Society of Heating, Refrigeration, and Air-Conditioning Engineers Inc, 2004.

[15] ISO 16484-5, *Building automation and control systems—Part 5. Data communication protocol*, Washington, DC, ISO, 2003.

[16] KS X 6909, *Building automation and control network (BACnet)*, Seoul, Korean Standards Association, 1999.

[17] S.T. Bushby, H.M. Newman, M.A. Applebaum, *NISTIR 6392—GAS guide tospecifying interoperable building automation and control systems using ANSI/ASHRAE Standard 135-1995, BACnet*. National Institute of Standards and Technology, Nov. 1999.

[18] ASHRAE Guideline 13-2000. *Specifying direct digital control systems*. Atlanta, GA, American Society of Heating, Refrigerating and Air-Conditioning Engineers, Inc., 2000.

[19]. BACnet "courtesy of http://www.bacnet.org/