DESIGN AND FEA OF WINDSHIELD WIPER SYSTEMS: INTEGRATION INTO CAE COURSES

Yaomin Dong[1], *Arnaldo Mazzei*[2]

Abstract — *This paper discusses an approach to develop a team project for a Computer Aided Engineering (CAE) course. The approach addresses mechanism design and finite element analysis (FEA) of an automotive windshield wiper system with a snow load protection device. The purpose of the course project is to introduce design and analysis of an actual mechanical assembly. Automotive windshield wiper systems are used in vehicles to remove contaminants such as rain, sleet, snow, and dirt from the windshield. A typical wiper system consists of an electric motor, a linkage mechanism to transform the rotational motion from the motor to oscillatory motion and a pair of wiper arms and blades. In order to meet engineering specifications, the design of the wiper linkage system is discussed in order to enhance wiping patterns, safety and functional performance.*

Index Terms — *CAE, FEA, Wiper systems, Stress.*

INTRODUCTION

Computer Aided Engineering, often referred as CAE, is the use of computer technology in engineering tasks such as design, analysis, simulation, and manufacturing. CAE includes, but is not limited to, the following areas:

- Computer Aided Design (CAD) such as solid modeling and assembly modeling;
- Stress analysis of components and assemblies using Finite Element Analysis (FEA);
- Thermal and fluid flow analysis using Computational Fluid Dynamics (CFD);
- Process simulation in manufacturing such as casting, molding and forming;
- Computer Aided Manufacturing (CAM) such as graphic numerical control and SLA; and
- Optimization of products and /or processes.

During the first three weeks of the 11-week semester CAE course at Kettering University, students work on solid modeling, sketching, assembly modeling, drafting, and advanced CAD topics including parametric part design and inter-part assembly modeling. One such example for CAD, as shown in

Figure 1, is a butterfly valve assembly. Students are required to design each of the components, the valve housing, shaft, retainer, plate, and crank. All parts are then placed in the assembly and mated properly. Advanced CAD techniques for this project include expressions and control parameters set at the assembly level so that the whole assembly can be adjusted automatically based on the main flow hole diameter, the length of the crank, and the number of fasteners.

Over the course of the following weeks, the main educational focus is developing student skills in using Finite Element Analysis (FEA) for the design of parts and assemblies. The fundamental techniques of FEA are introduced and applied to various structural components. Students in the class perform analytical calculations based on the traditional solid mechanics analytical approaches, and compare the analytical solution to the numerical simulations developed in the FEA module of the software. Figure 2 shows the stress contour plot of a hook under a load. In this problem, one can see that an analytical solution can over simplify the situation when compared to results obtained from an FEA. Similar situations exist in the other assignments of the course, namely, the caster FEA (Figure 3) and the fixture FEA (Figure 4) assignments.

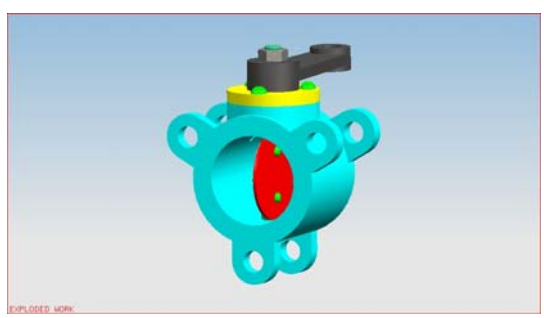

FIGURE 1

1 Yaomin Dong, Assistant Professor of Mechanical Engineering, Kettering University, 1700 W University Avenue Flint, Michigan 48504, USA, ydong@kettering.edu
2 Arnaldo Mazzei, Associate Professor of Mechanical Engineering, Kettering University, 1700 W University Avenue Flint, Michigan 48504, USA, amazzei@kettering.edu

BUTTERFLY VALVE ASSEMBLY

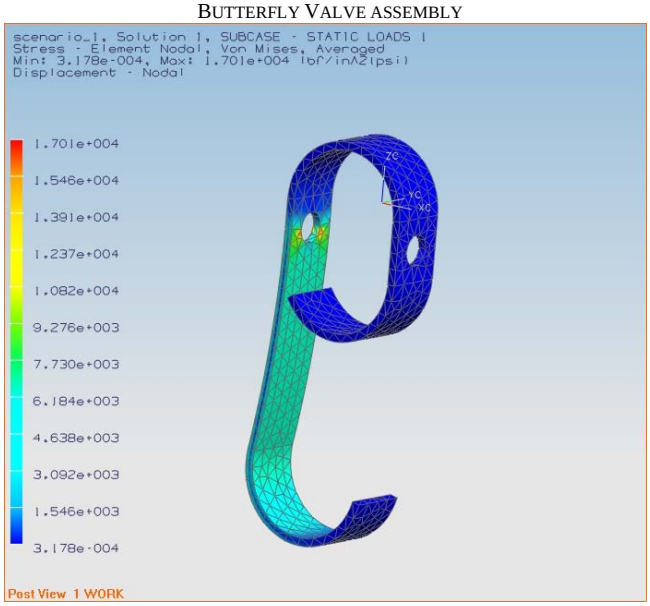

FIGURE 2
FINITE ELEMENT ANALYSIS OF A HOOK

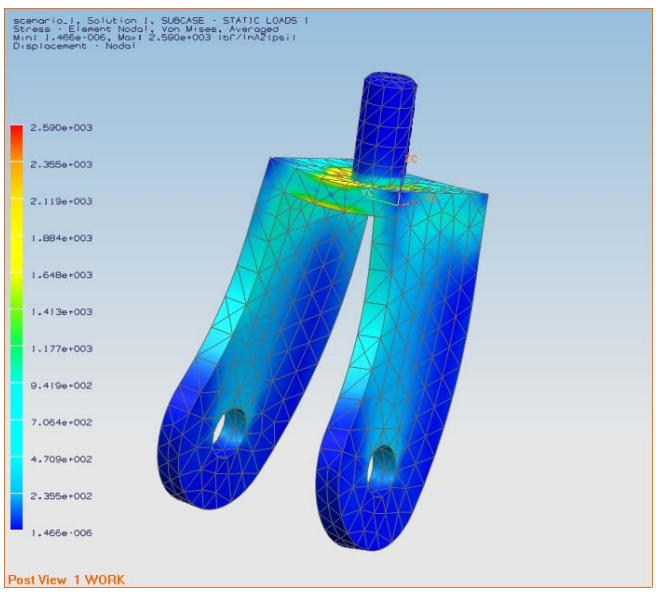

FIGURE 3
FINITE ELEMENT ANALYSIS OF A CASTER FRAME

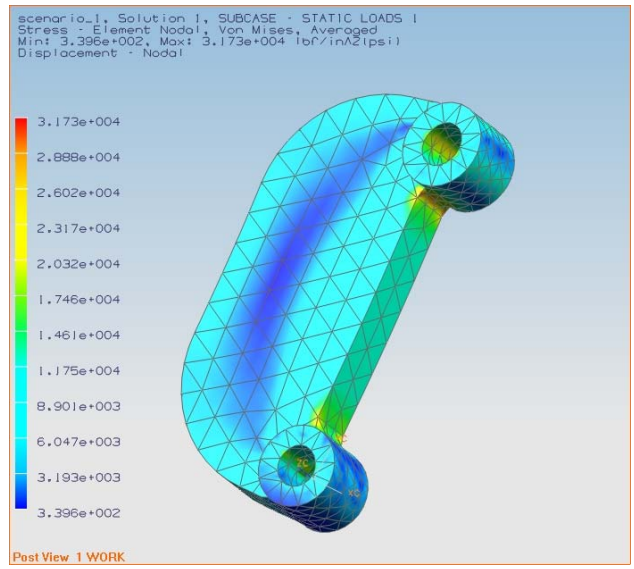

FIGURE 4
FINITE ELEMENT ANALYSIS OF A FIXTURE

PROPOSED NEW PROJECT

The current *individual course projects* have been a great exercise for the CAE students to apply the knowledge gained during the course. Yet, quite often in real world product development situations, engineers have to work concurrently as a team on the same assembly project. This raises the issue of project data management, which is currently not addressed in this course. In order to address this problem, a team course project was suggested in previous works [1] [2]. The purpose of the proposed course project was to show how to manage and share data when working on assemblies and their related parts with other team members. Project Data Management (PDM) is used through an automotive windshield system design and analysis. Next the wiper mechanism design with system snow protection is presented and discussed.

WINDSHIELD WIPER SYSTEMS

Automotive windshield wiper systems, in conjunction with washer systems, are used in vehicles to remove contaminants such as rain, sleet, snow, and dirt from the windshield. As shown in Figure 5, a typical wiper system consists of an electric motor, a linkage to transform the rotational motion from the motor to oscillatory motion, and a pair of wiper arms and blades[3] [4]. The areas of the windshield that must be wiped by the wiper system are mandated by the federal motor vehicle safety standards FMVSS 104[5].

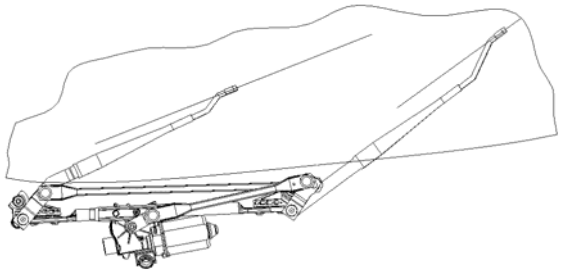

FIGURE 5
A TYPICAL WIPER SYSTEM

The design of a typical wiper system starts with the technical specifications of the OEM car maker. Given a particular application platform, the geometry of the windshield glass is known. Based on the wiping pattern requirement (Figure 6) dictated by FMVSS 104, the lengths of the wiper blades and wiping angles can be determined. Then based on wiping speed and blade-glass frictional loads, the wiper arms and blades can be designed. The linkage mechanism can be designed based on the kinematics, structural strength, wiping angle, and system packaging requirements. The electric motor can be chosen according to the energy required by the wiper system.

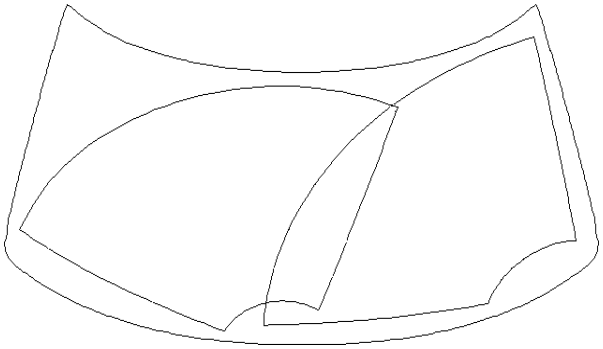

FIGURE 6
WIPING PATTERN

The project team can be set to consist of five members including the project manager. Each member has a role defined as follows [1]:

1. **Project Manager (PM)** - creates the team library and the wiper assembly file;
2. **Project Team Member 1 (PTM1)** – creates and modifies the blades and arms;
3. **Project Team Member 2 (PTM2)** – creates and modifies the linkage members;
4. **Project Team Member 3 (PTM3)** – created and modifies the frame and pivot assembly;
5. **Project Team Member 4 (PTM4) –** creates and modifies motor and packaging interfaces.

A typical wiper arm and blade structure is shown in Figure 7, and stress analysis of the wiper arm is depicted in Figure 8 [2].

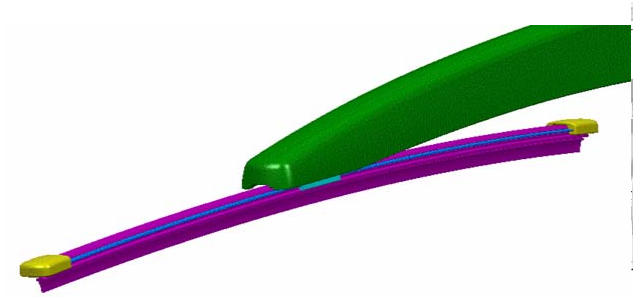

FIGURE 7
ARM AND BLADE ASSEMBLY

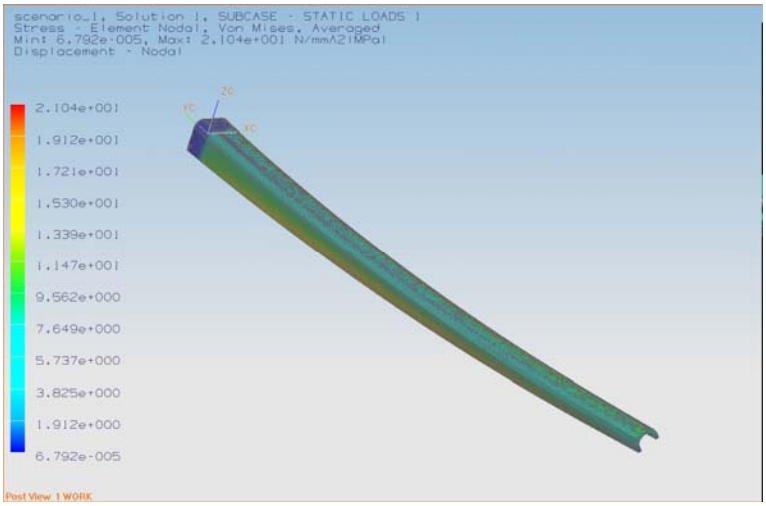

FIGURE **8**
ARM STRESS DISTRIBUTION BY FEA

The wiper arm and the lever are mounted on the pivot shaft that is located in the pivot housing assembly (Figure 9). The pivot housing assembly includes grommet, retainer, washer, O-ring, bearings, spring washers, pivot shaft, lever and ball stud.

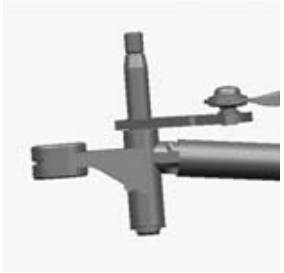

FIGURE 9
FRAME AND PIVOT HOUSING ASSEMBLY

The pivot shaft is the most critical component in the pivot shaft assembly, because the wiper arm and blade assembly is mounted on the top and the lever is in connected in the middle. If the pivot shaft fails, the whole wiper system will lose its performance, even its function. Figure 10 shows the stress and displacement distributions. Given the same material properties as the wiper arm, it is seen that this design is safe [2].

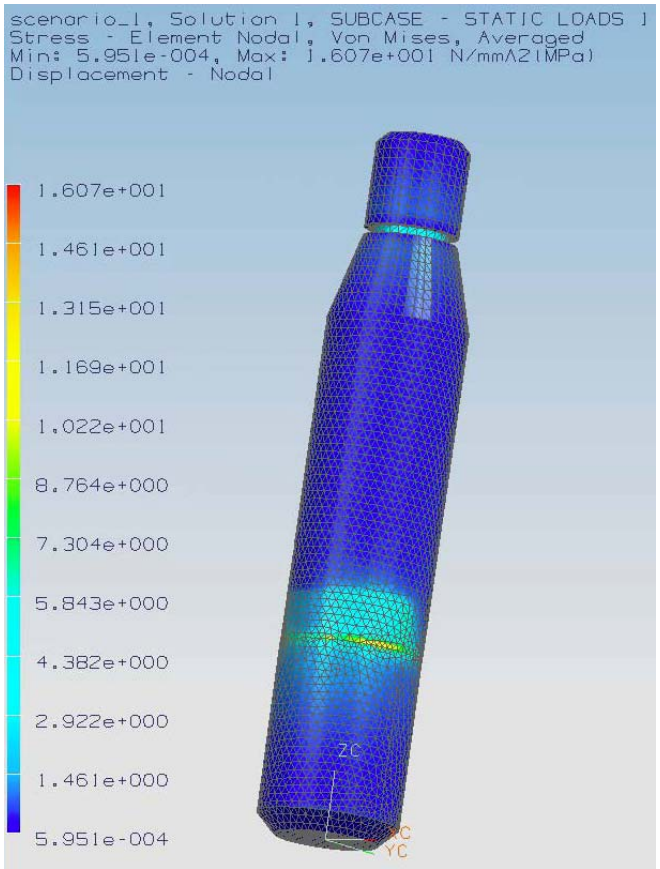

FIGURE 10
PIVOT SHAFT STRESS AND DEFORMATION BY FEA

Flexible Linkage for Overload Protection

Snow and icy often build up on the windshield glass in the winter, as shown in Figure 11. The snow/icy stack can literally block the wiper arms/blades, and therefore the wiper system load will significantly increase. Such an excessive load, often referred as snow load, will cause either fatigue or catastrophic system failure. Figure 11 shows a broken rocker arm.

FIGURE 11
WINDSHIELD WIPERS UNDER SNOW LOAD THAT BREAKS A ROCKER ARM

Figure 12 depicts a proposed solution. In this illustration the hatched area represents snow/ice pack above the cowl screen, which restricts the normal motion of the system. Once the arms have contacted the restriction, the loading in the system increases as the motor torque approaches the motor's stall torque. However, once the critical load is reached in the connecting rod, the rod will buckle limiting any further increase in system loading and allowing the crank to rotate through the reversal position. In the illustration, the connecting rod is shown in the post-buckled configuration.

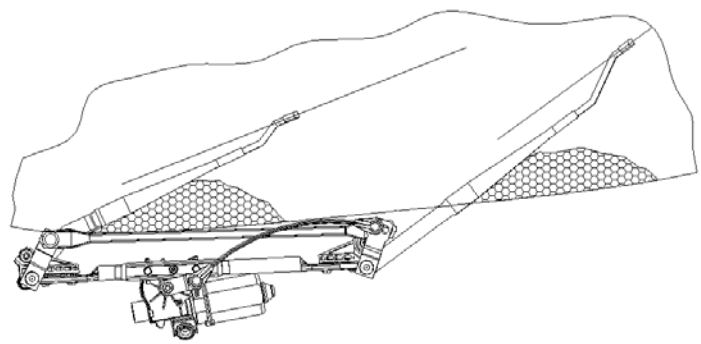

FIGURE 12
WINDSHIELD WIPERS WITH A FLEXIBLE LINKAGE

Figure 13 depicts the connecting rod of length L, cross sectional area A, and cross section moment of inertia I. The elastic modulus of the material is denoted as E. The ends of the rod are free to rotate due to the socket-ball joints. External compressive load P is applied at the centroid of the cross section.

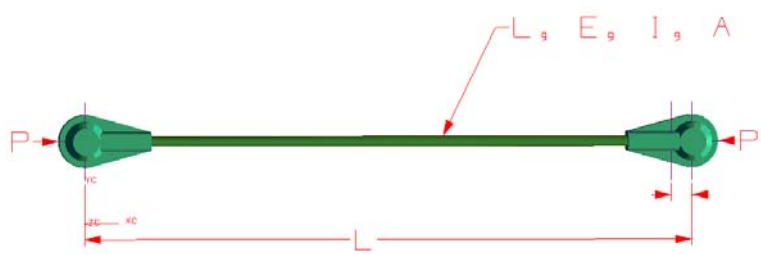

FIGURE 13
A FLEXIBLE LINKAGE

As the load is increased and assuming that the elastic limit of the material is not reached, a critical point is encountered at which the rod deforms laterally. In this configuration the rod supports the load via bending. The applied load at which this transition occurs is referred to as the critical load Pcr. The critical load can be determined for a given cross section, column length, and material from [7]

$$P_{cr} = \frac{\pi^2 \cdot EI}{L^2}$$

The wiper linkage mechanism can therefore be designed with the flexible connecting rod. The spherical sockets at both ends of the linkage are over-molded plastic parts to provide for ball-socket joints [3] [4]. The composite material is selected per the following specification:

Resin Specification: Thermoset Polyester (21% by weight)
Fiber Specification: 113 Yield E-glass Roving (75% by weight)
Filler content (4% by weight)

Monotonic mechanical properties of the materials are:

Elastic Modulus: 43 GPa (6.2 Mpsi)
Ultimate Strength: 1140 MPa (165 ksi)
Strain at Fracture: 2.6%
Specific Gravity: 1.92

The flexible connecting rod undergoes a maximum tensile load of 1000 N at motor stall. The stress and deformation are calculated by FEA as shown in Figure 14.

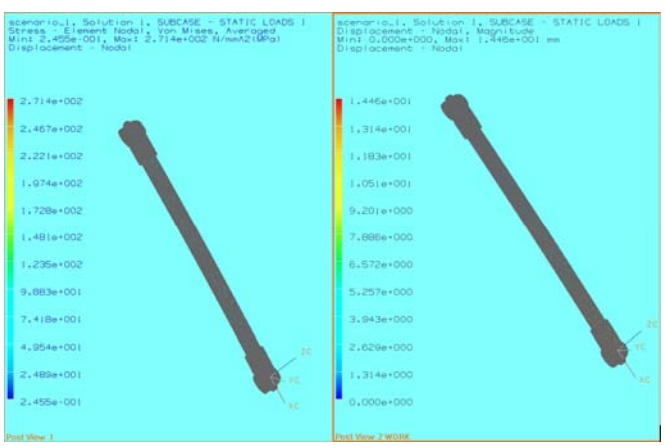

FIGURE 14
LINKAGE STRESS AND DEFORMATION BY FEA

CONCLUSIONS

The purpose of the course project is to show how to manage and share data when working on assemblies and their related parts with other team members. Each project team has five members and a set-up with a "configured project" including Roles, States, Approval Process, Library and Catalog. Each team member is responsible for several parts design or analysis. The FEA of the wiper arm, linkage, and pivot shaft are presented as examples of virtual prototyping. Through data sharing and iteration of all team members, the wiper system assembly is optimized to meet given technical specifications.

Because the system is protected from loading extremes, durability of the wiper system should be enhanced. Moreover, now the system can be made extremely stiff resulting in excellent pattern control without concern about the extreme loads that normally result from extreme stiffness. For some system components, it may be possible to eliminate material, which holds the potential for cost savings. Also, coupling this potential with the reality that composite connecting rods are only 25% the mass of their steel counterparts, mass savings are inevitable.

REFERENCES

[1] Dong, Y. and Mazzei, A. "Development of CAE Course Project Focusing On Data Management Through Windshield Wiper System Design", *Paper #AC 2007-304*, Proceedings of the 2007 *ASEE* Annual *Conference and Exposition*, Honolulu, Hawaii, USA.

[2] Dong, Y., Mazzei, A. and Zang, P., "Development of a CAE course project focusing on project data management and virtual prototyping through FEA of windshield wiper system design", *Paper #AC 2008-1187, Proceedings of the 2008 ASEE Annual Conference and Exposition*, Pittsburgh, PA, USA.

[3] Dong, Y. And Penrod, J., "Use of a Designed Experiment to Determine the Optimal Method to Join Injection-Molded Parts to Pultrusions", *SAE Technical Paper Series, 2006-01-3575* (2006).

[4] Buchanan, H. C. and Dong, Y., "Windshield Wiping System", *United States Patent # US 6,148,470* (2000).

[5] FMVSS 571-104, 49 CFR, "Federal Motor Vehicle Safety Standards; Windshield Wiping and Washing Systems", *National Highway Traffic Safety Administration, DOT, USA.*

[6] Eletronic Data Systems Corporation, "Data Management User's Guide", *EDS* (2003).

[7] Beer, F. P. and Johnston, E. R. Jr., "Mechanics of Materials", *McGraw-Hill Book Company*, New York (1981).