AN INVESTIGATION OF ROBUST INDOOR LOCATION SYSTEM TECHNIQUES FOR EDUCATIONAL PURPOSES

Wilfred Fritz[1], Deon Kallis[1], Zhao Liu[1]

Abstract - This paper investigates the various methods used in robust indoor location systems for educational purposes. The most important uses of localization namely navigation and tracking are addressed. The difference between slow tracking and fast tracking is discussed. A performance evaluation of indoor geolocation systems for example RF and Ultrasonic indoor location systems is done. These indoor location techniques can be used in robots and mobile machines with various applications.

I. INTRODUCTION

The process of location can be interpreted as computing the coordinates of an object in a given coordinate system [1]. The most important uses of localization are navigation and tracking, while location and position information can also enable a huge amount of secondary applications. These possibilities include using the location information for customizing products, services; improving ways of data communications, building modern homes and offices, applications in emergency situations and in the context of a manufacturing, facilitating the movement of parts, the location of parts and an improvement in the overall efficiency of the production network.

Measuring the distance between the object to be located and the reference station is a basic task in geolocation systems. Measurement can be mainly divided into three categories: fine precision measurement, intermediate precision measurement and coarse measurement. The type of precision in the measurement used in a research problem depends on the characteristics and requirements of the system under study.

Coarse measurements are acceptable for use in long distance measurement systems, with errors in the order of a few meters. The Global Positioning System (GPS) is a well-known geolocation system using coarse measurements and was developed in the late 1980's. In GPS systems satellites are used as the reference points and distances (or pseudo ranges) between these satellites and the unknown points are measured. Using exact satellite locations, obtained from orbital ephemeris data, the coordinates of the point to be localized are computed via matrix computations. [1].

Recently, intermediate precision measurement systems with errors limited to centimeters have attracted more attention. These systems can facilitate Slow and Fast tracking. Slow tracking means tracking a body moving at slow speed. It is mainly used in the tracking of personal, equipment and assets or the tracking of a part or tool in an automated manufacturing environment. Indoor geolocation systems are the most widely used application for Slow tracking measurements. Indoor geolocation systems can be placed in three main categories: commercial, public safety and military applications. In commercial applications, for example, the need for locating patients in a hospital, guiding blind people, tracking small children or elderly individuals is of great importance as well as locating specific and important objects in warehouses or in-demand objects in hospitals. Public safety application includes locating inmates in a prison or firefighters in a burning building. In military applications the main interest is locating soldiers in combat. [3]

Fast tracking means tracking a body moving at fast speed. Tracking the movement of many vehicles moving in formation requires real-time adaptation and control through the use of estimation of the coordinates of the members of the formation. As the number of vehicles on the road increases, the traffic conditions became more complex and potentially dangerous. The critical nature of these applications requires the design and implementation of accurate and robust location systems.

In the context of reconfigurable assembly systems (RAS) where the automated movement of parts and/or tools forms an integral part of the factory system, the need for an intermediate measurement system is inferred. The relatively slow speed of objects moving in this environment points to a system where slow tracking is possible. A manufacturing environment, however, is far from ideal. The physical layout of the plant could, depending on the platform employed, have a serious impact on the overall performance of the system due to noise (electrical or otherwise) or propagation effects. The varied nature and dynamics of such an environment places serious constraints on the objects of a reconfigurable system.

II. METHODS FOR DETERMINATION OF LOCATION

A number of methods can be used to measure the distance between the object and fixed stations. Direction of Arrival (DOA) [5] and Received Signal Strength (RSS) [4] are the most popular ones. Time of Arrival (TOA) and Phase of Arrival (POA) [1] are also used widely in location estimation systems. GPS which is the most famous positioning system uses the TOA method.[8] Although GPS is the most widely used geolocation system in outdoor environments, it is nit recommended for indoor location applications. The GPS resolution is too big and signals from the satellites cannot penetrate all buildings.

A number of researchers have proposed systems and designs using rf-based systems for geolocation. Accurately predicting the location of an individual or an object using rf is a difficult task due to the harsh environment that is often

[1] Cape Peninsula University of Technology, Cape Town, Bellville, South Africa - liuz@cput.ac.za, kallisd@cput.ac.za, fritzw@cput.ac.za

encountered within typical office and / or factory spaces. Recently, a number of commercial systems have become available (RFID-Radar, Trolley Scan) which can locate predefined objects with high degrees of precision but there is still a strong interest in developing robust and low-cost systems comparable to outdoor geolocation systems like GPS.

1. *A real-time RSS testbed for indoor geolocation systems.*

Most of the positioning systems that employ RSS-based fingerprinting methods are dependent on the building of a database. There is no way to evaluate the performance of such positioning systems except by performing large-scale measurements. For this reason, a testbed has been developed to improve on this situation. It is time consuming and costly to run massive measurements in order to build a database for the positioning systems. By roaming around the entire site, enough metrics and information for each point are collected. Accuracy of the positioning system is closely related to the number of reference nodes in the database, as well as their distribution. A real-time testbed for indoor geolocation systems has been developed in order to evaluate the performance of a positioning system in a specific building.[8]

In previous developed methods, the process involves building a grid networks for the intended test-site and then collect the metric according to the location of each node in the grid. One can measure the metric and compare it with the database after building the database for a new location. The best node could be found and referred to as the desired point. Figure 1 shows a block diagram of the positioning process. The more reliable the measured metrics are, the less complex the algorithm for estimation.

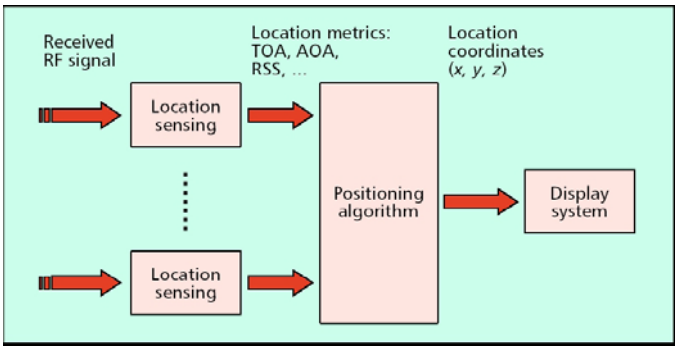

Figure 1: Outline of an indoor geolocation system

This method is not repeatable and every time the measurement is done different errors are obtained. The testbed proposed by Heidari allows an evaluation of the performance a positioning system without gathering real data from different locations. Also the scenario is repeatable, so the results of one positioning system can be compared with the results from another one

The intuition here is to use a real-time channel simulator for performance evaluation of a positioning system. With the aid of this real-time channel simulator the user can simulate the channel between transmitter and receiver antenna.

Figure 2 shows a block diagram of the designed test bed. Ray tracing and modeling blocks are implemented on a Server while and a display are implemented on the laptop. The real-time channel simulator block is hard-wired to the access points while channel models are fed to channel simulator through a parallel interface. Figure 3 shows the results of test parameters versus distance error. As noted, if the number of access points is increased, the error decreases

2. *The 3D SpotON indoor location sensing technology based on RF signal strength*

The process of creating the SpotON object tagging technology is based on RSS analysis. Such an approach combines the advantages of wireless location systems (fine granularity) with that of infrared-based systems (detection at a distance). [4]. AIR ID is an adjustable, long-range active ID badge, reader and software solution for desktop computers. Featuring hands-free login, automatic desktop computer locking based on the user's proximity and read/write memory in the AIR ID badge. [4]. The first step for AIR ID analysis is to perform a simple experiment to determine if it was reasonable to believe that AIR ID could provide the signal strength data required and warranted further investigation. The experiment was set-up as follows:

1. In a large indoor space, a single base-station transmitter is placed at a central point in the room connected to a laptop running the measurement and logging program.
2. 12 badges are placed in a concentric circle of a known radius surrounding the base-station.
3. Several signal strength measurements are taken and logged.
4. All badges are moved to slightly increase (by approximately 1 foot) the radius of the circle around the base-station.
5. Steps 3 and 4 are repeated until the majority of the badges are out of range of the Base-station.

It can be seen that as distance from the base-station increases the signal strength drops-off roughly. The variations are most likely the result of signal reflection and interference inherent in an indoor environment. The location sensing architecture set out to be built is conceptually simple even though the algorithm implementation is certainly nontrivial. Multiple base stations provide signal strength measurements mapping to an approximate distance. A central server then aggregates the values to triangulate the precise position of the tagged object. At last, the positions of objects are computed and published to users.

A straightforward hill-climbing algorithm attempting to minimize signal strength error relative to empirical data is used to compute the location. The algorithm works as follows:

1. Choose a random coordinate position *s* and constant distance *m*.

2. For each of the 6 possible point's *p*, and the located m units in the primary x,y and z directions do the following:

a. Compute a prediction vector *Vp* of signal strength values based on the distance *d* to each base station from point *p* using Equation 1 derived from empirical data.

b. Compute an error vector *Ep* where each element of *Ep* is a difference of squares of the predicted and observed signal strength values.

3. *s* <= *EP* where *Ep* is less than the current minimum error value.

4. When *s* does not change then return *s*.

Equation 1 is the function based on empirical data mapping distance to a Base-station (*d*) to a signal strength estimate (*SS*). Note that SS is in abstract units.

SS □□0.0236**d* 2 □□0.629**d* □□4.781
(1)

The distance movbed *m* is chosen to be a constant small value mapping to approximately six inches of distance. An easy optimization to this algorithm is to choose *s* to start at the last computed position instead of at random with each new location computation. SpotON tags supply larger devices to take advantage of location sensing technology operating standalone or potentially as plug and play. They are low power, with small dimensions, and can be located accurately, yet still have enough processing power for caching, authentication, and other tasks. SpotON tagging technology offers several advantages over existing systems when combined with a general location data model.

SpotOn and similar systems are RF-based indoor positioning system that use RF signals to locate indoor objects. These systems use the RSSI (Received Signal Strength Information) of the RF signal to measure the distance between transmitter and receiver. But it is difficult to measure precise distance using received signal strength, and the estimated position usually varies by a few meters. It is possible to utilize UWB (Ultra Wide Band) technology to measure precisely the distance based on TDOA (time-difference-of-arrival), but the hardware is usually complicated. [4]

3. *Hybrid systems using both ultrasonic and RF signals*

Although, ultrasonic positioning system requires additional hardware to send and receive ultrasonic pulse, it can determine 3D position of indoor objects with high precision. In order to determine an object's position precisely, it is usually required to pre-configure many reference station bases for both RF-based and ultrasonic-based systems. This indicates that setup and management costs would be unacceptable if they are applied to large scale environments such as an office building or factory floor. From this point of view, a system called DOLPHIN (Distributed Object Locating System for Physical-space Internetworking positioning) has been developed. [9].

A significant feature of the DOLPHIN system is the use of few reference points to locate objects automatically. Although, current versions of the DOLPHIN system employ ultrasound-based approaches, it is possible to apply positioning algorithms to RF-based systems. All objects in the system have the capability of sending and receiving ultrasonic and radio signals to measure distance between two objects with only a few manually preconfigured objects as reference stations. All other locations of objects are gradually determined based on a recursive positioning algorithm. Figure 4 shows the system architecture of the DOLPHIN system. The system consists of nodes that have RF and ultrasound transmission/reception functionality and one-chip CPU's for calculating the location of the nodes. The RF function is used for time synchronization and message exchange among nodes. The CPU has a pulse counter, and it is used to measure the TDOA of ultrasonic pulse.

The progress of the DOLPHIN positioning system processing can be illustrated by Figure 4. For example, node D can determine its position by receiving ultrasound pulses from the reference nodes A, B, and C. However, node E and F cannot receive all ultrasonic pulses from reference nodes because of obstacles (e.g. wall, etc.). Here, if the position of node D is determined, and node E receives ultrasonic pulse from node D, then node E can compute its position by using distances from node B,C and D. And if the location of node D and E is determined, node F can compute its position using node C, D and E. In this way, all nodes in the DOLPHIN system can be located.

There are two main advantages in this positioning system. Firstly, the system requires only a few (minimum three) nodes to determine the position of all nodes. Secondly, nodes can determine their position even if they cannot receive ultrasound from reference nodes directly. Two types of nodes exist in the DOLPHIN system; a reference node, which is a fixed node located to previously measured position, and a normal node which location is determined by the algorithm. Each node has a unique ID for RF communication, a node list for node selection, and a position table for position calculation. In the positioning algorithm, three types of messages are exchanged among nodes. These messages are transmitted via an RF signal. An ID notification message (IDMsg) is used for notifying a node ID to other nodes. A measurement message (MsrmtMsg) triggers distance measurement among nodes. This message contains the node ID of a certain node which should transmit an ultrasonic pulse and use it for time synchronization in the DOLPHIN system. A location notification message (LocMsg) contains ID and location of the node which transmits the message. By exchanging these messages, all nodes in the system play three different roles; one master node, one transmitter node, and many receiver nodes. A master node selects one transmitter node based on the node list, then transmits a measurement message with a certain ID. When a node receives the message and its ID matches the transmitted ID, it becomes a

transmitter node and subsequently generates ultrasonic pulses. At the same time, all other nodes become receiver nodes and start their internal counter.

Although the DOLPHIN system has many advantages, there still exist two types of failures, node failure and recognition failure. Node failure is where the node suddenly stops because of an unpredictable event. Recognition failure is where the IDMsg transmitted from a master node does not reach the other node because of the communication channel or message collision. Experimental evaluation has shown that the designed positioning system works well with accuracies around 15cm. However, the accuracy degrades when hop count between reference and normal nodes increases.

4. *RF-free ultrasonic positioning system*

All wearable centric location sensing technologies must address the issue of clock synchronization between signal transmitting systems and signal receiving systems. GPS receivers, for example, compensates for synchronization errors by incorporating a model of the receiver clock offset in the navigation solution. Drift between satellite clocks is also monitored to keep signal data in synch with GPS time. Most ultrasonic positioning systems solve the synchronization problem by using a second medium for communication between transmitter and receiver devices. The transmitters in these systems emit RF signals (pings) to indicate the transmission of subsequent ultrasound signals (chirps). By subtracting the arrival time of the ping from that of the chirps, the receiver is able to compute the distance to each transmitter. An ultrasonic positioning system that does not use RF signals to achieve synchronization is designed in [5]. The research improves on its predecessors in two important ways;

Firstly, by eliminating the need for RF, the size and weight of the ultrasonic receiver considerably are reduced. Large RF chips and cumbersome antennae, that quite often consume more than fifty percent of the receiver configuration, are no longer required. The receiver is reduced to a single ultrasonic microphone and its accompanying amplification circuitry. The second improvement achieved with an RF-free solution is the elimination of clock synchronization errors. These errors are particularly evident in systems that use pings to indicate the start of a chirp transmission sequence.

The transmitter used in the RF-free system is constructed in a similar fashion to the system designed at the University of Bristol [6]. Four transmitters are placed in a square on the ceiling of a room and are activated in a cyclic pattern as shown in Figure 5. The task is to design a receiver that is capable of modeling its position based on chirp reception times only. It must incorporate a number of different known and unknown variables, including the following:

U	-	transmission time of a chirp
R	-	reception time of a chirp
P	-	transmission interval
T	-	time-of-flight for a chirp
(x, y, z)		receiver position
(Xi, Yi, Zi)		position of transmitter i

A Kalman filter (KF) has distinguished itself as a powerful tool for modeling time-varying random processes [7]. It is used extensively in tracking and navigation applications as well as applications that require complex sensor fusion. The transmitter follows the time-varying process described below:

$$U_K = U_0 + kP \qquad (2)$$

Here, transmission times, U_K, are linearly related to the transmission period, P, and the transmission time of the first chirp in the endless sequence, U_0. In order to model the simple linear relationship of Equation 2, a Kalman filter (a least-square fit will suffice) is not required. However, for the more complex, dynamic scenario, a KF is employed. The KF was tested with two ten-minute data sets: one with a stationary receiver and one with the receiver moving around the room. The filter design is based on the state vector that contains five unknown random variables.

$$x = [P\ U_0\ x\ y\ z]\ T \qquad (3)$$

For this iteration, it is assumed that movements of the receiver are a result of noise in the process dynamics. In other words, it is hidden from the filter. As a result, the state transition matrix, A, is the identity matrix, defining the state – which includes position as constant over time. The convenient consequence of including the process dynamics in the KF is that pre-processing of the measured data is no longer required. The chirp reception times are passed directly to the filter as the measurements.

$$R_k = \sqrt{(x - X_i)^2 + (y - Y_i)^2 + (z - Z_i)^2} + U_0 + kP \qquad (4)$$

Equation 4 is used to define the relationship between chirp reception times and the state, nominating it as the KF measurement sensitivity equation. In order to use this non-linear equation in the model, it is linearised by applying the Extended Kalman Filter (EKF) method. In an EKF, the measurement sensitivity matrix, Hk (a Jacobian matrix), is derived from the partial derivatives of the measurement sensitivity equation, evaluated at the current state. Hk is computed from the partial derivatives of Equation 4 at every time-step.

The problem is also specially suited for a technique of measurement integration known as single constraint at a time (SCAAT) [10]. This method allows reception times to be incorporated into the filter as they are observed (instead of waiting for a complete chirp sequence), improving the response time of the system as well as reducing computational overhead. Employing SCAAT means that the step counter of the filter is equal to k, which counts chirps originating from transmitters identified by k mod n, where n is the number of transmitters.

It can be demonstrated that it is not necessary to use RF in an ultrasonic positioning system for wearable computers. This

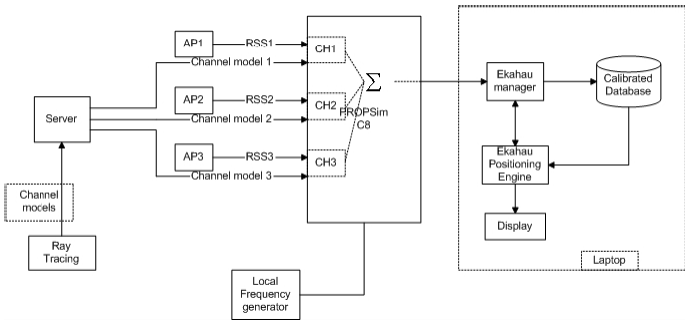

Figure 2: Block diagram of the real-time test bed [8]

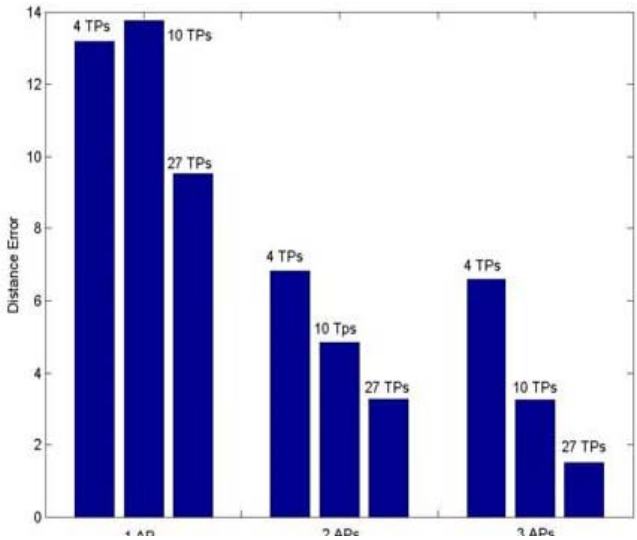

Figure 3: Mean of error for different access points and different training points

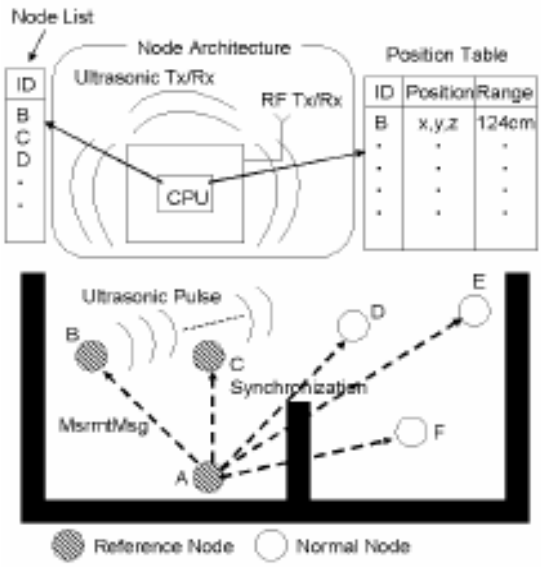

Figure 4: The DOLPHIN System

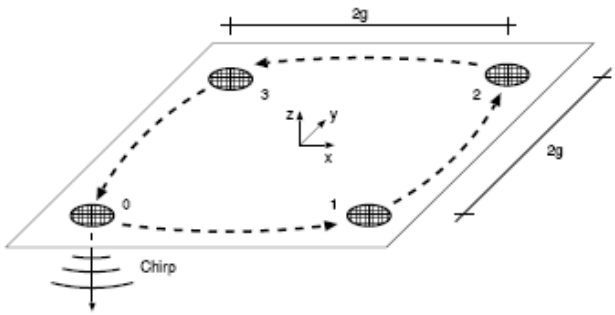

Figure 5. Ultrasonic Transmitter Operation

system shows that it is possible to model the position of a receiver using chirp reception times only. This is achieved by exploiting the periodic transmission interval in the RF free transmitter. This system is able to locate the receiver's coordinates precisely (10cm for moving test).

CONCLUSION

As seen from the above, there continue to be the need to develop new geolocation systems that address the issues of precision, reliability, cost, power consumption, etc. Although a number of geolocation systems are commercially available, their performance characteristics are optimized for specific scenarios. The scenario for which the current research is being undertaken is one that is fairly dynamic and noisy. The important performance criteria in such an application would include reliability, precision and low-cost.

REFERENCES

[1] Elliot Kaplan 1996: "Understanding GPS Principles and Applications" Artech. House Publishers, Norwood, Massachusetts, pages12-16.

[2] James J. Ca®ery Jr. 2000: "Wireless Location in CDMA Cellular Radio Systems." Kluwer Academic publishers, Boston, Massachusetts, pages 5-9

[3] A.Harter, A.Hopper, P.Steggles, A.Ward, P.Webster 1999: "The Anatomy of. a Context-aware Application," MOBICOM1999, August 1999, pages 11-12.

[4] J.Hightower, C.Vakili, G.Borriello, R.Want 2001: "Design and Calibration of the SpotON Ad-Hoc Location Sensing System,"pages2-4

[5] Michael R McCarthy Henk L Muller 2003: "RF Free Ultrasonic Positioning," pages 4-7.

[6] C. Randell, H. Muller 2001: "Low cost indoor positioning system," In G. D. Abowd, editor, Ubicomp 2001: Ubiquitous Computing,system," In G. D. Abowd, editor, Ubicomp 2001: Ubiquitous Computing, pages 42–48. Springer-Verlag, September 2001.

[7] R. E. Kalman.1960: "A new approach to linear filtering and prediction problems," Journal of Basic Engineering (ASME), 82(D) pages 35–45.

[8] Mohammad Heidari 2005: "A Testbed for Real-Time Performance Evaluation of RSS-based Indoor Geolocation Systems in Laboratory Environment" pages 7-17.

[9] Yasuhiro FUKUJU, Masateru MINAMI, Hiroyuki MORIKAWA, Tomonori AOYAMA 2002: "DOLPHIN: An Autonomous Indoor Positioning System in Ubiquitous Computing Environment" ISBN: 0-7695-1937-7 INSPEC Accession Number: 8014507 Digital Object Identifier: 10.1109/WSTFES.2003.1201360 Publication Date: 15-16 May 2003

[10] G. Welch, G. Bishop 1997: "SCAAT: Incremental tracking with incomplete information" pages 21-25