TOOL TO AID THE VISUALLY IMPAIRED IN LABORATORY CLASSES

Rogéria Oliani[1], Alexandre César Rodrigues da Silva[2], Melisa J. B. Durango[3], Tércio A. dos Santos Filho[4]

Abstract *— The social inclusion of people with special needs is a challenge in a globalized world. To give people the right to be different and have their needs recognized and met is crucial for social development. One challenge is the inclusion of people with special needs in education, in order to prepare teachers and materials to support student, to facilitate communication and learning of these. In this work we present a tool (hardware and software) to the aid of laboratory classes for the visually impaired through the identification of equipment and different objects using RFID and Bluetooth. The hardware it is a read module and wireless data transmission fixed on the wrist of users, helping identify objects. Software developed for Android smartphones, receives the object ID and through database support, transmits to the student information about the location of objects, their characteristics and other information of educational importance of sound mode.*

Index Terms — bluetooth, education, RFID, visually impaired.

INTRODUCTION

Giving people with special needs equal opportunities and promote their social inclusion has still been a challenge in a globalized world. Among these challenges is access to education. The Convention on the Rights of Persons with Disabilities [1], adopted by the UN establishes in Article 24 that States Parties shall ensure that persons with disabilities are able to access general tertiary education, vocational training, adult education and lifelong learning without discrimination and on an equal basis with others. To this end, States Parties shall ensure that reasonable accommodation is provided to persons with disabilities.

To ensure that rights of access to education for people with special needs are met it is necessary to prepare teachers, student support materials and tools that facilitate communication and learning of these, taking into account the different types of needs.

Among the different types of special needs will discuss in this paper the visually impaired. Worldwide, there are approximately 285 million people with visual impairment: 39 million are blind and 246 have low vision [2].

Some tools have been developed to assist the visually impaired in the educational area [3]-[5]. P-CUBE [5], which is an education tool for programming mobile robots, and confirmed the system operation. It consists of cubic blocks and a program mat. The user creates a program by laying out surface gap blocks on the program mat based on the structure of the algorithm. RFID readers are arranged in the programming mat, and the information of the RFID tags in the blocks is read in order to specify the location of each block.

The areas of science and mathematics have traditionally been inaccessible to students with visual impairments. Complex and high-tech fields such as Chemistry, Physics, Engineering, Biology, and Mathematics are rife with visually presented concepts and information [6].

Given this context, this work presents a tool to aid the visually impaired in laboratory classes of Digital Systems and Microprocessors in the field of Engineering.

The developed tool uses RFID and Bluetooth technologies to identify equipment, components and other objects used by students in laboratory classes and transmit sound mode information concerning these to the user.

RFID

Radio frequency identification (RFID) is a generic term for technologies that use radio waves to automatically identify people or objects [7]. An RFID system has two basic components: RFID tags and RFID reader. The RFID tag basically has a microchip attached to an antenna, which are encapsulated in a package appropriate to the object or person to which it is intended to identify (credit card, car key, nail to identify trees or pallets, clothing labels, among others). The RFID reader is a device used to communicate with the tags by emitting radio waves. In relation to its power source, the tags can classified into 3 types [8]:

- **Passive:** It has no power source. The energy needed for its operation is received from the reader through the signals from. By virtue of this characteristic, are less expensive and have a longer duration compared to active tags. However, they have limited computing power and memory.

[1] Rogéria Oliani, Electrical Engineering of the College of Engineering, University of São Paulo State (UNESP), Ilha Solteira, São Paulo, Brazil, rooliani@gmail.com
[2] Alexandre César R. da Silva, Electrical Engineering of the College of Engineering, University of São Paulo State (UNESP), Ilha Solteira, São Paulo, Brazil, acrsilva@dee.feis.unesp.br
[3] Melisa J. B. Durango, Electrical Engineering of the College of Engineering, University of São Paulo State (UNESP), Ilha Solteira, São Paulo, Brazil, mbarrera@udea.edu.co
[4] Tércio A. dos Santos Filho, Computer Science Department, Federal University of Goias, Catalão, Goiás, Brazil, tercioas@gmail.com
DOI 10.14684/ICECE.9.2015.41-44
© 2015 COPEC

- **Semi-passive:** Have an internal battery, but uses the energy provided by readers to transmit the signal to these, as with passive tags. In this case, the battery supplies power to its microchip, allowing it to have a greater processing capacity.
- **Active:** Have an internal energy source, which enables the sending of data transmission signals to the reader and feed more complex circuitry and sensors. This type of tag has a higher commercial value, and a lower lifetime compared passive tags.

Another form of classification tags is given by the frequency of the data transmission signal. These may operate at [7], [9]:

- **Low Frequency (LF):** Operate at a frequency from 30 to 300 kHz and have a slow transfer of data, and a short read range (up to 1 meter).
- **High Frequency (HF):** The frequency is in a range of 3 to 30 MHz. They can usually be read up to 1 meter away, and have faster data transmission that the low-frequency tags, however, consume more power than these.
- **Ultra High Frequency (UHF):** Operates on a 300 MHz to 3 GHz frequency range, and typically operate between 866 and 960 MHz. UHF Tags have higher transfer rates and greater range than the high and low frequency tags. However, radio waves do not pass through items with high water content. Compared to low-frequency tags, UHF tags are more expensive and use more energy.
- **Microwave:** Operate above 3 GHz. Tags Microwave have very high transfer rates and can be read at long distances, however, they use a lot of energy and are more expensive compared to others.

BLUETOOTH

Bluetooth is a wireless communication technology intended to simplify short-range connections between devices [10].

Bluetooth technology operates in the unlicensed industrial, scientific and medical (ISM) band at 2.4 to 2.485 GHz and was designed to allow its use in portable devices, thus having a radio antenna transmission of low power, low power consumption [11]. Table I shows the classification of Bluetooth according to the power level of your antenna. As is shown, the signal range increases as the antenna power increased.

TABLE I
BLUETOOTH POWER CLASSES

Power Class	Maximum Output Power (miliwatts)	Expected Range (meters)
Class 1	100	100
Class 2	2,5	10
Class 3	1	1

Class 2 is the most widely used in portable devices. Already the Class 3 is intended mainly industrial area.

METHODOLOGY

The tool developed in this work consists of a hardware and software.

The hardware called oIT, fixed on the user's wrist, uses RFID technology to identify the RFID tags that are fixed at workbenches identifying a group of objects, and the objects themselves or their cases when the size of these not allow the attachment of the tag.

Figure 1 gives an example schema of a workbench with RFID tag that identifies the group "components", and several components (LED, Resistor, Push Button, Diode, Potentiometer, and Microcontroller) which are also identified by RFID tags and are part of this group.

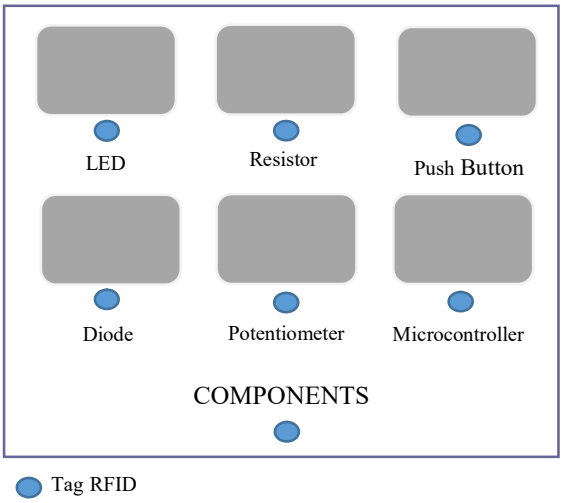

FIGURE. 1
EXAMPLE SCHEMA OF A COMPONENTS WORKBENCH.

The software called oRS uses Bluetooth to receive the tag ID when the user approaches the oIT module of this, and transmits the information regarding the identified object of sound mode to the user. Figure 2 illustrates operating system.

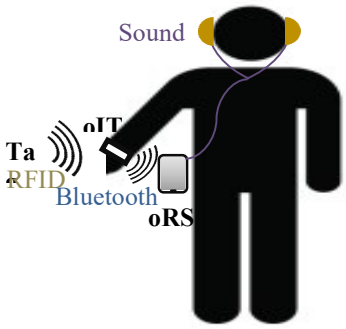

FIGURE. 2
OPERATING SYSTEM.

Hardware (oIT)

For the development of a reading and wireless data transmission module, which resulted in a small equipment, which can be worn on the wrist of its users, were used in this study ID-20LA RFID reader developed by the company ID-innovations and HC-06 Bluetooth module .

The ID-20LA RFID reader can transmit data (tags IDs) in three formats: ASCII, Magnet Emulation and Wiegand26. In this work, we selected the ASCII (American Standard Code for Information Interchange). The data transfer rate in ASCII format is 9600 bps and the output is given in 12-byte format.

The HC-06 Bluetooth module (Bluetooth version 2.0) can transmit and receive data through serial ports TXD (Data Transmission) and RDX (Receive Data) using the following rates: 1200, 2400, 4800, 9600, 19200 and 38400 bps. The chosen rate to be used was the standard rate: 9600 bps.

Figure 3 shows a schematic of the ID-20LA RFID and HC-06 Bluetooth.

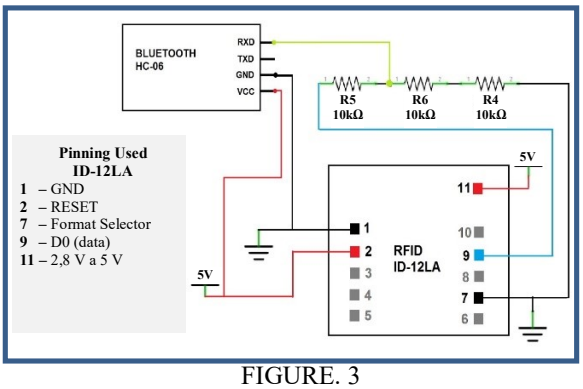

FIGURE. 3
SCHEMATIC OF THE ID-20LA RFID AND HC-06 BLUETOOTH.

Software (oRS)

oRS is a software developed for smartphones using the Android platform. It uses Bluetooth technology of smartphones to communicate with the oIT module.

The identified tag ID is received by the oRS and this associates the ID with data related to this in the database.

The MySQL database used in this study previously fed with data regarding the identification of groups, location of objects as well as their characteristics and other information of educational importance can assist students with visual impairments in laboratory classes of Digital Systems and Microprocessors.

The information in the database are transmitted sound mode for the user, allowing it to receive information from objects, and can carry out the random queries and as often as necessary to their learning.

In Figure 4 is shown the structure of data related to objects, and an example of ID tag query that identifies the LED component. On Tags table is located the tag ID (id_tag) and through its type checks if it identifies an object (1) or group (0). The relationship with the Object table is made by id_tag field, and this location is the LED shown in row 1 and column 1. Identified the object, the titles of different characteristics are obtained in TypeCharact table, which relates to the Characteristic table presenting their descriptions.

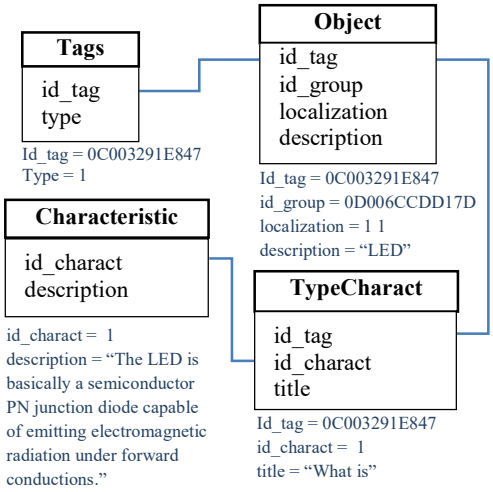

FIGURE. 4
STRUCTURE OF DATA RELATED TO OBJECTS.

EXPERIMENT

Tests were conducted to verify the read range between the tag and the RFID reader. During testing we used two types of RFID tag: keychain and card. The objective was to measure the read range with different tags at different positions relative to the RFID reader.

The tags were placed in the vertical position, horizontal and 45 degrees to the RFID reader. The encapsulated tag card in addition to the aforementioned various positions was also made with this reading either with the short side of the card base (A), now the longest side (B); since this is rectangular.

During testing ten readings for each position of the tag were performed. The maximum values of reading distances taken at each position were observed. Figure 5 and 6 show the maximum reading distances obtained for the tags in card and keychain format, respectively.

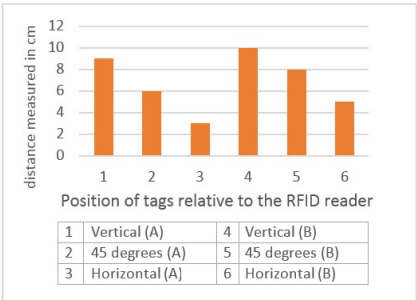

FIGURE. 5
MAXIMUM READING DISTANCES - TAG CARD.

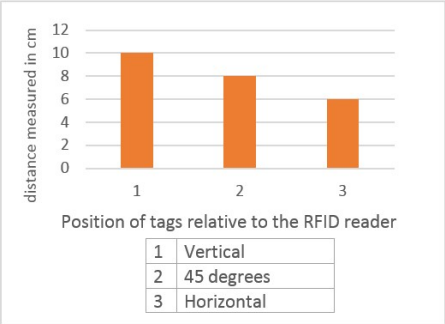

FIGURE. 6
MAXIMUM READING DISTANCES - TAG KEYCHAIN.

The results demonstrate that the card and keychain tags obtained a maximum reading distance of 10 cm, as well as in both, it is observed that the maximum reading distance decreases while the tag is increased angle of inclination in relation to RFID reader.

Regarding the tag card, we could observe that this reading distance decreases when with the shorter side of the card on the base (positions 1, 2 and 3).

CONCLUSION

The work resulted in a tool (oIT and oRS), to assist students with visual impairments in laboratory classes of Digital Systems and Microprocessors by identifying objects and obtain educational content information concerning these. The tool features enables its application in many laboratories, adapting the database content to the identified objects. This tool does not provide the transposition of all barriers encountered by visually impaired in laboratory classes, requiring the use of other that together this allow users to take their needs are met, and thus make feasible the access to information and academic training.

ACKNOWLEDGMENT

We thanks to Graduate Program in Electrical Engineering - PPGEE and CNPq (National Council for Scientific and Technological Development) processes: 309023/2012-2.

REFERENCES

[1] UN General Assembly, "Convention on the Rights of Persons with Disabilities", New York, 2006.

[2] World Health Organization, "Visual impairment and blindness", 2014. [Online]. Available: http://www.who.int/mediacentre/factsheets/en/.

[3] Karshmel, A. I., Pontelli, E., Gopal, G., "Helping Visually Impaired Students in the Study of Mathematics", *29th ASEEnEEE Frontiers in Education Conference*, San Juan, 1999.

[4] Park, C. H., Remy, S., Howard, A. M. ,"Using Haptic and Auditory Interaction Tools o Engage Students with Visual Impairments in Robot Programming Activities", *IEEE Transactions on Learning Technologies,* vol. 5, nº 1, 2012.

[5] Kakehashi, S., Motoyoshi, T., Koyanagi, K., Kawakami, H., Motoyoshi, T. *et al*., "P-CUBE: Block Type Programming Tool for Visual Impairments", em *Conference on Technologies and Applications of Artificial Intelligence*, Taipei, 2013.

[6] Schleppenbach, David, "Teaching Science to the Visually Impaired: Purdue University's Visions Lab", Information Technology and Disabilities E-Journal, vol. 3, nº 4, 1996.

[7] RFID Journal, RFID Journal, 2013. [Online]. Available: http://www.rfidjournal.com/.

[8] RFID JOURNAL BRASIL, RFID JOURNAL BRASIL, 2011. [Online]. Available: http://brasil.rfidjournal.com.

[9] Finkenzeller, Klaus, "Fundamentals and Applications in Contactless Smart Cards, Radio Frequency Identification and Near-field Communication", RFID Handbook, Wiley, 2010.

[10] Chaouchi, H., Laurent-Maknavicius, M., "Security Basics, Security in On-the-shelf and Emerging Technologies", Wireless and Mobile Network Security, Wiley-ISTE, 2009.

[11] Bluetooth SIG, "A Look at the Basics of Bluetooth Technology", 2014. [Online]. Available: http://www.bluetooth.com.